R&I MANUFACTURING CO.

DURA-THRUST

VERTICAL - LIGHT DUTY HORIZONTAL LINEAR THRUSTER

ET-4

DIMENSIONAL DRAWING

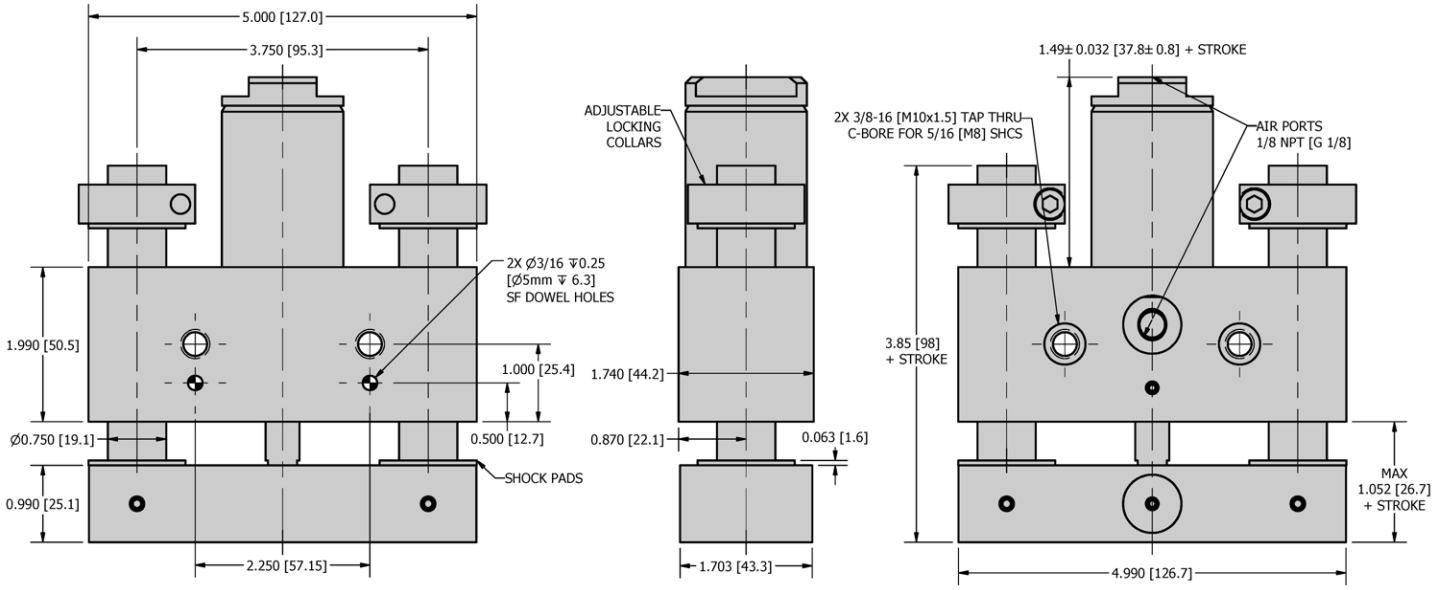

SPECIFICATIONS	ET-4	MET-4
Maximum Air Pressure	100 psi	6.9 bar
Thrust Force @ 80 psi / 5.5 bar	140.8 lbf	624.3 N
Unit Force Factor - Extend	1.76 lbf/psi	113.5 N/bar
Unit Force Factor - Retract	1.61 lbf/psi	103.9 N/bar
Base Weight	4.07 lb	1.85 kg
Additional Weight per Stroke	0.33 lb/in	5.92 g/mm
Cylinder Bore Diameter	1.500"	38.1 mm
Shaft Diameter	0.750"	19.05 mm

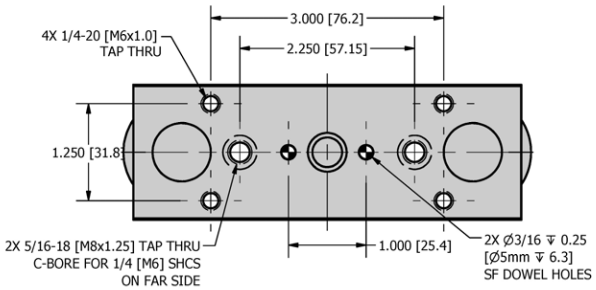

LOADING	ET-4	MET-4
Typical Load (Force + Weight)*Stroke **(F+W)*S**	15 lbf-in	1.69 N-m
Max Moment **M**	15 lbf-in	1.69 N-m
Typical Dynamic Payload **W**	25 lbf	9.1 kg

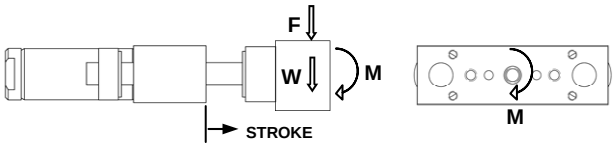

CAUTION! Flow controls recommended for nearly all applications

HOW TO ORDER : BASIC UNIT

METRIC	BASIC MODEL	STROKE	SEALS
M	ET-4 -	☐ -	V

METRIC M

STROKE Inch: 1.0" - 12.0" @ 1.0" increments
mm: 25.4 - 304.8 @ 25.4mm increments

SEALS V - Viton (standard Buna - N)

SAMPLE ORDER: ET-4-1.0

Ex) ET-4 Thruster with 1 inch stroke

CUSTOM DESIGNS ALWAYS AVAILABLE
PLEASE CONTACT US FOR INFORMATION

ACCESSORIES (order separately)

MAGNETIC SENSOR KITS * (Cylinder clamp mounted)

CSK-N - Magnetic Sensor NPN w/ quick disconnect Kit
CSK-P - Magnetic Sensor PNP w/ quick disconnect Kit
CSK-R - Magnetic Sensor REED w/ quick disconnect Kit

** Sensors Kits include (2) sensors and (2) cylinder clamps and (2) 5 meter cables.*

MAGNETIC SENSORS * (Cylinder clamp mounted)

CS-N - Magnetic Sensor NPN w/ quick disconnect
CS-P - Magnetic Sensor PNP w/ quick disconnect
CS-R - Magnetic Sensor REED w/ quick disconnect

** Includes (1) sensors and (1) cylinder clamp*

SENSOR CABLE

SENCAB-5 - Quick Disconnect PUR Cable 5M Length